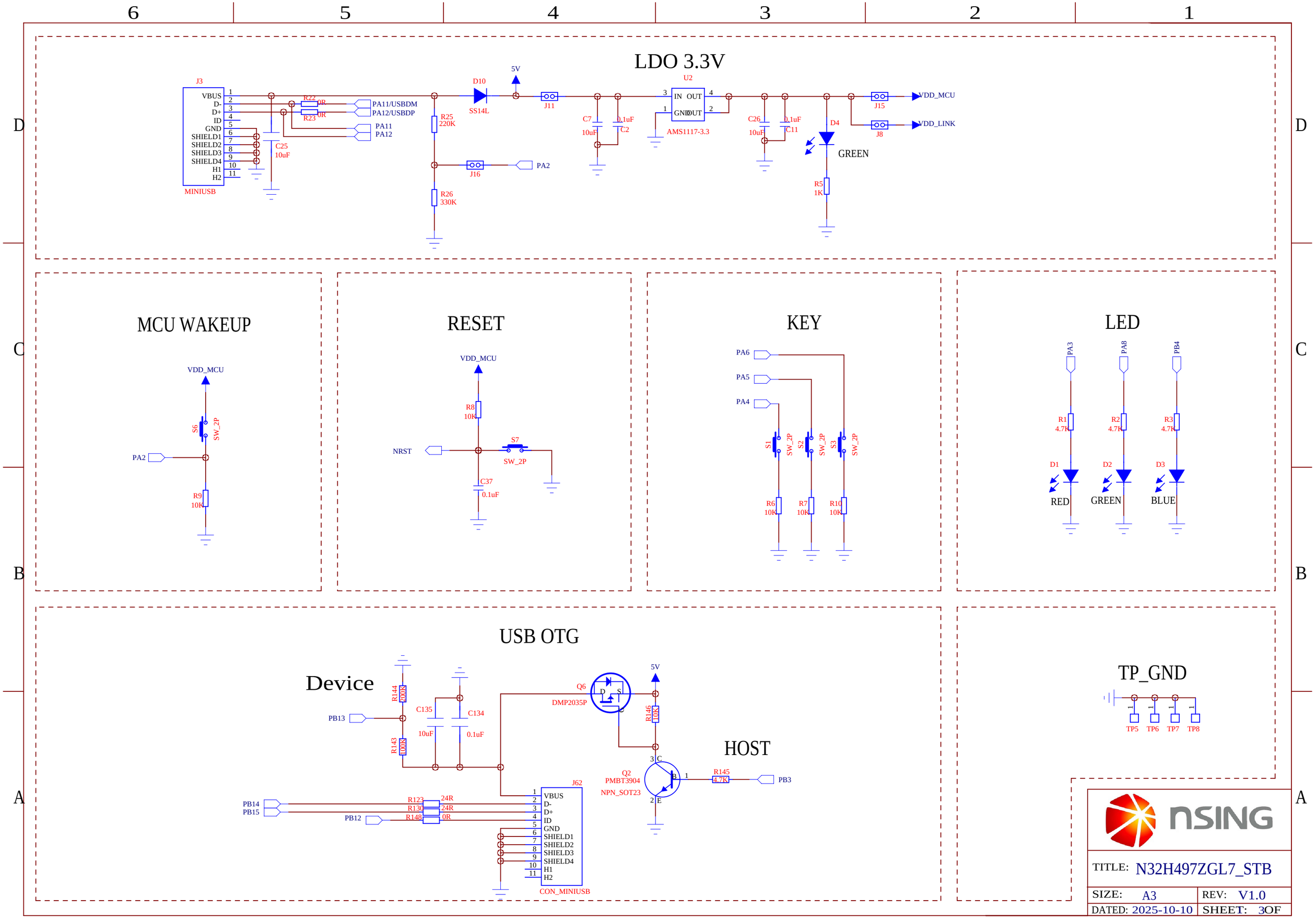
LDO 3.3V
J3
VBUS
D-
D+
ID
GND
SHIELD1
SHIELD2
SHIELD3
SHIELD4
H1
H2
MINIUSB
R22 0R
R23 0R
PA11/USBDM
PA12/USBDP
PA11
PA12
C25 10uF
D10
SS14L
5V
R25 220K
R26 330K
J16
PA2
J11
C7 10uF
C2 0.1uF
U2
IN OUT
GND OUT
AMS1117-3.3
C26 10uF
C11 0.1uF
D4
GREEN
R5 1K
J15
J8
VDD_MCU
VDD_LINK
MCU WAKEUP
VDD_MCU
S6 SW_2P
PA2
R9 10K
RESET
VDD_MCU
R8 10K
NRST
S7 SW_2P
C37 0.1uF
KEY
PA6
PA5
PA4
S1 SW_2P
S2 SW_2P
S3 SW_2P
R6 10K
R7 10K
R10 10K
LED
PA3
PA8
PB4
R1 4.7K
R2 4.7K
R3 4.7K
D1 RED
D2 GREEN
D3 BLUE
USB OTG
Device
PB13
R144 100K
R143 100K
C135 10uF
C134 0.1uF
Q6 DMP2035P
5V
R146 10K
HOST
Q2 PMBT3904 NPN_SOT23
R145 4.7K
PB3
PB14
PB15
PB12
R123 24R
R130 24R
R148 0R
J62
VBUS
D-
D+
ID
GND
SHIELD1
SHIELD2
SHIELD3
SHIELD4
H1
H2
CON_MINIUSB
TP_GND
TP5
TP6
TP7
TP8
NSING
TITLE: N32H497ZGL7_STB
SIZE: A3
REV: V1.0
DATED: 2025-10-10
SHEET: 3OF

MCU

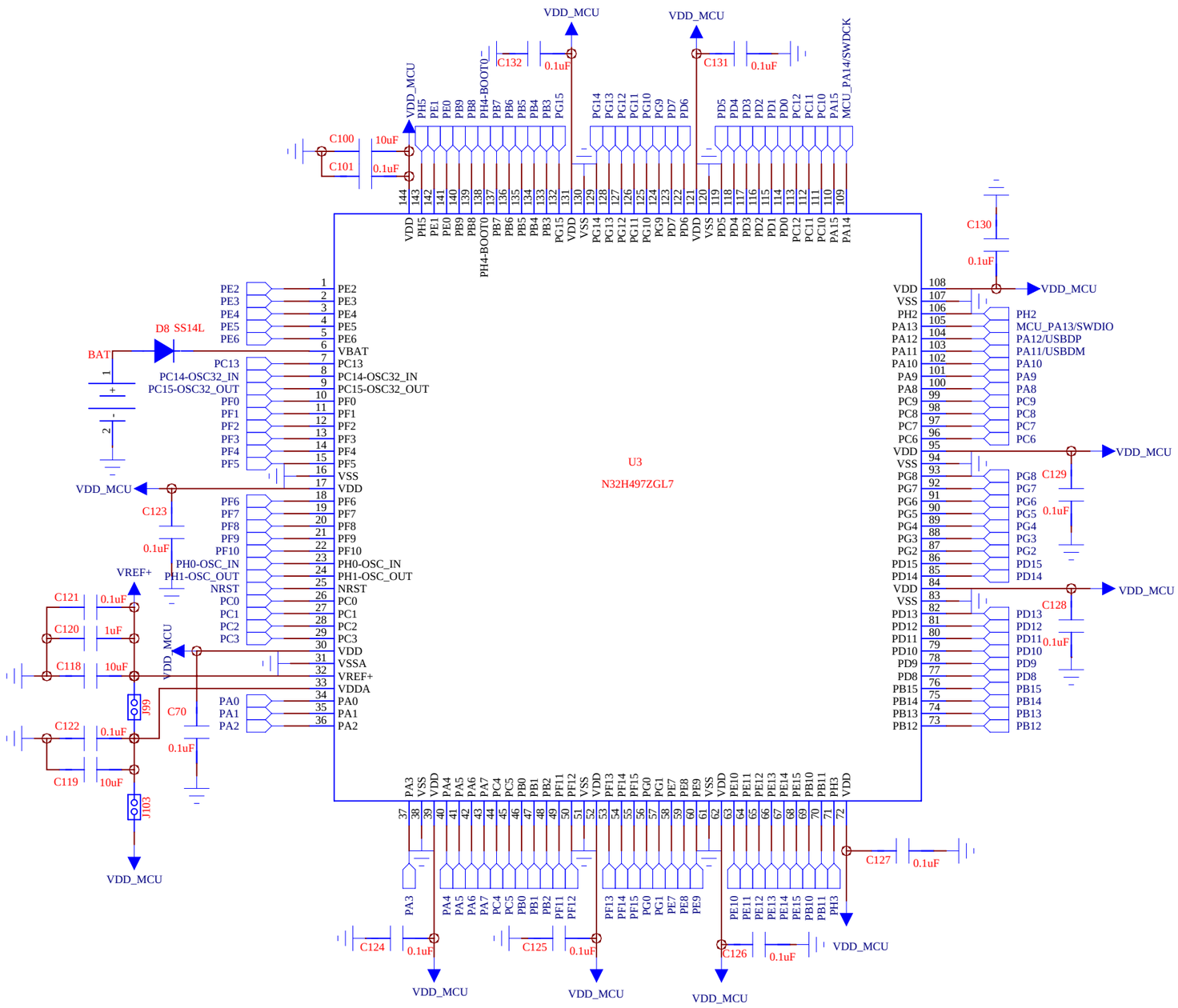

32.768K Crystal

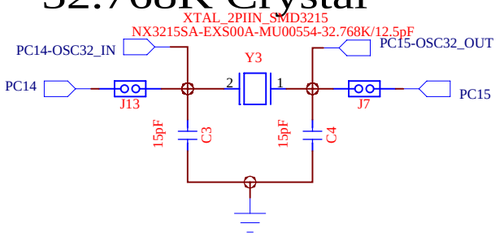

16M Crystal

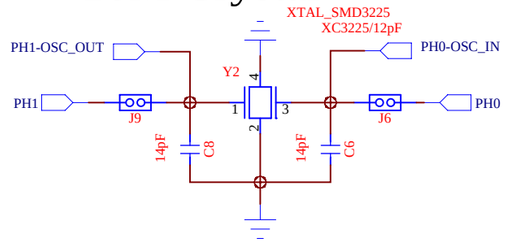

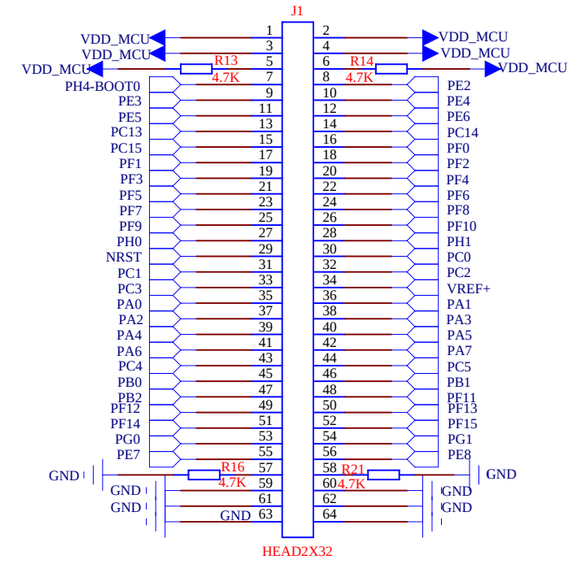

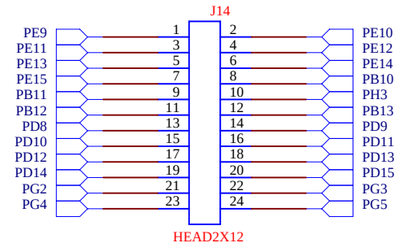

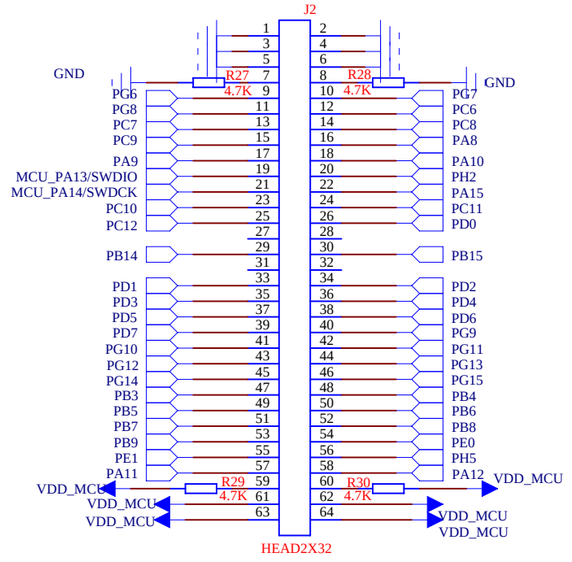

NSING

TITLE: N32H497ZGL7_STB	
SIZE: A3	REV: V1.0
DATED: 2025-10-10	SHEET: 3OF

NS-LINK

MCU

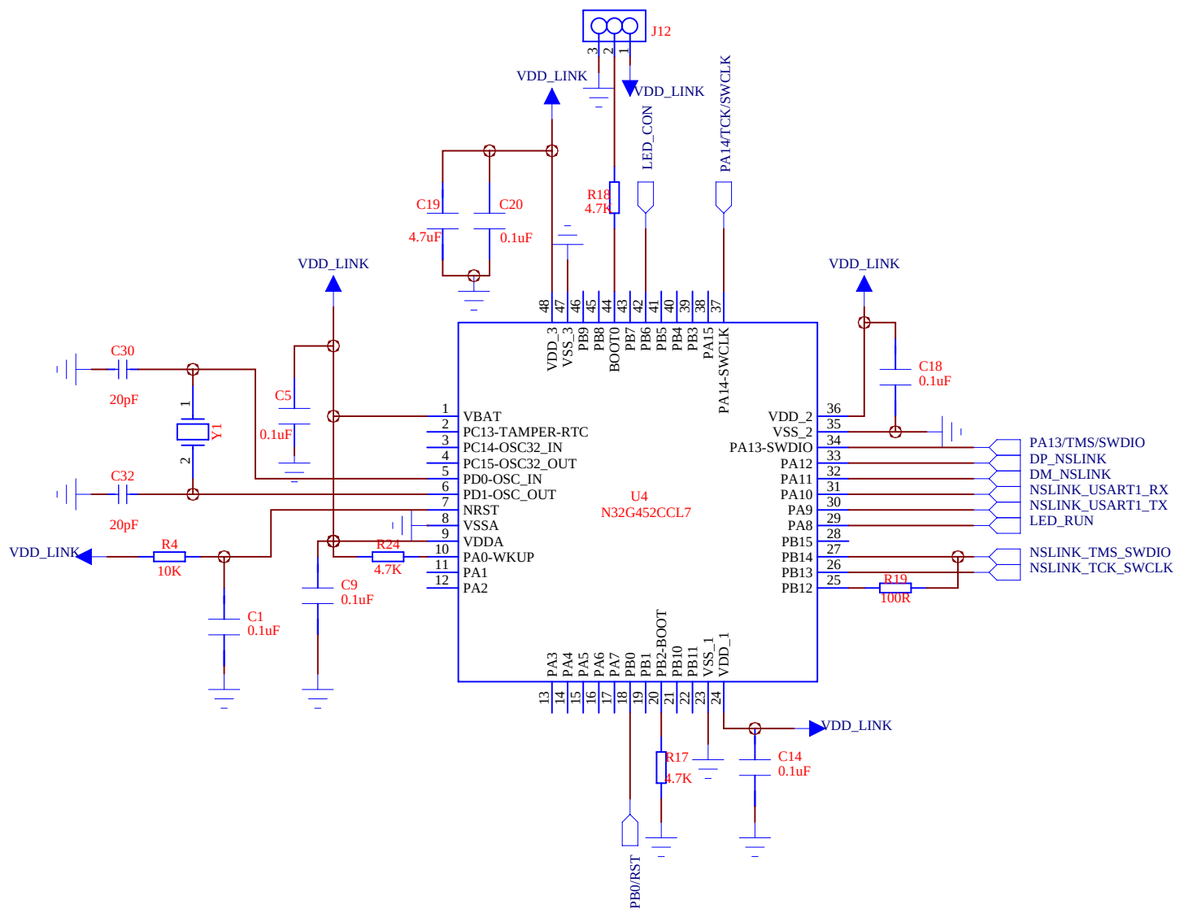

DEBUG USB

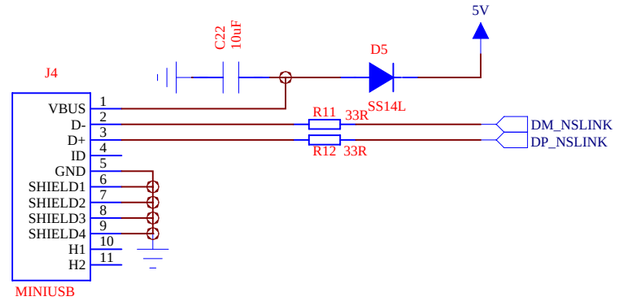

HEADER

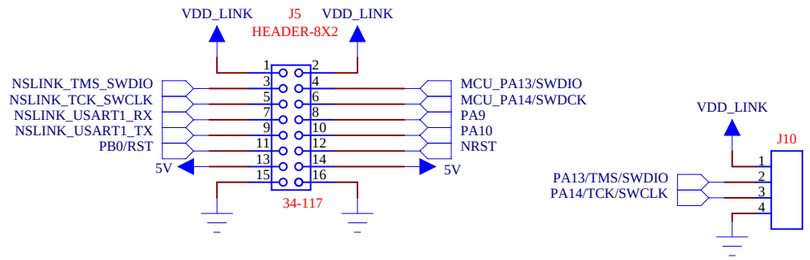

LED

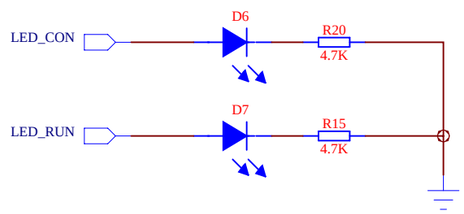

TITLE: N32H497ZGL7_STB	
SIZE: A3	REV: V1.0
DATED: 2025-10-10	SHEET: 3OF